GB

12 variants

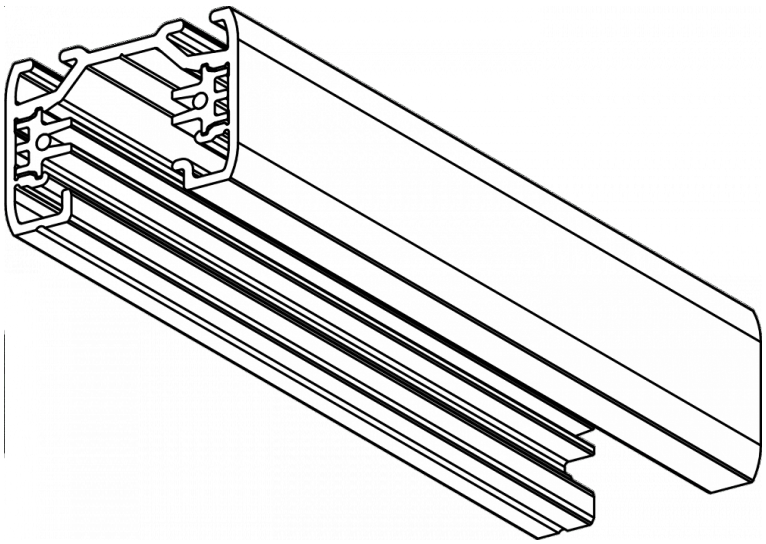

Dimensions

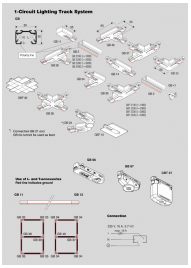

Available colours

White **Black** **Anodized aluminium**

Single-circuit system, 230 V, rated current 16 A. Select connectors according to the earth-conductor position shown in the technical drawing. GB21 and GB24 cannot be used as feeds.

Manufacturer references: GB 2100-3 — 1000 mm, GB 2100-2 — 1000 mm, GB 2100-1 — 1000 mm, GB 2200-3 — 2000 mm, GB 2200-2 — 2000 mm, GB 2200-1 — 2000 mm, GB 2300-3 — 3000 mm, GB 2300-2 — 3000 mm, GB 2300-1 — 3000 mm, GB 2400-3 — 4000 mm, GB 2400-2 — 4000 mm, GB 2400-1 — 4000 mm.

GB PDF

The power and luminous flux ranges are calculated separately from the listed variants. For an exact combination, see the code details on the site.

See all variants on bright.gr >

Technical characteristics

Common data

Characteristics that apply to all versions of GB.

Mounting position	**Ceiling**	Operating voltage	**230 V**
Housing	**Aluminium**	Protection rating	**IP20**
Optic	—	Accessories	—
Control Gear	—		

Options per version

Length 1,000 - 4,000 mm | Width 30 mm | Height 20 mm

The ranges per CCT summarise the values of the available codes. To choose a specific code, open the full table of variants.

See all variants on bright.gr >