GBF

12 variants

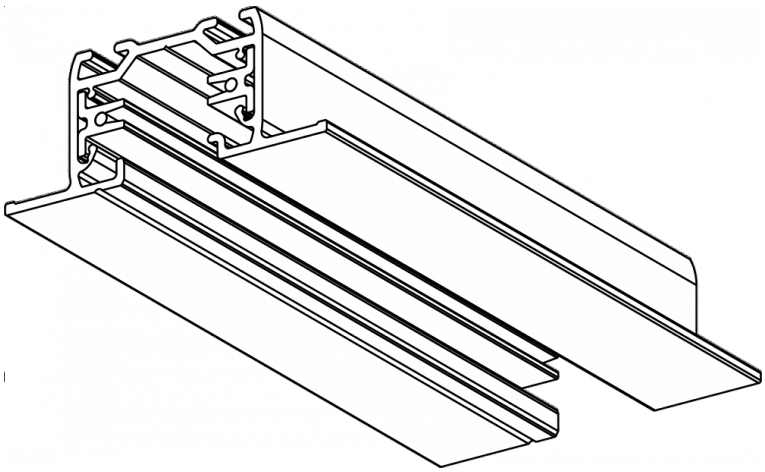

Dimensions

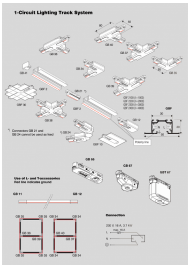

Available colours

White **Black** **Anodized aluminium**

Single-circuit system, 230 V, rated current 16 A. Select connectors according to the earth-conductor position shown in the technical drawing. GB21 and GB24 cannot be used as feeds.

Manufacturer references: GBF 2100-3 — 1000 mm, GBF 2100-2 — 1000 mm, GBF 2100-1 — 1000 mm, GBF 2200-3 — 2000 mm, GBF 2200-2 — 2000 mm, GBF 2200-1 — 2000 mm, GBF 2300-3 — 3000 mm, GBF 2300-2 — 3000 mm, GBF 2300-1 — 3000 mm, GBF 2400-3 — 4000 mm, GBF 2400-2 — 4000 mm, GBF 2400-1 — 4000 mm.

GBF PDF

The power and luminous flux ranges are calculated separately from the listed variants. For an exact combination, see the code details on the site.

See all variants on bright.gr >

Technical characteristics

Common data

Characteristics that apply to all versions of GBF.

Mounting position	**Ceiling**	Operating voltage	**230 V**
Housing	**Aluminium**	Protection rating	**IP20**
Optic	—	Accessories	—
Control Gear	—		

Options per version

Length 1,000 - 4,000 mm | Width 50 mm | Height 20 mm

The ranges per CCT summarise the values of the available codes. To choose a specific code, open the full table of variants.

See all variants on bright.gr >