GB 12

2 variants

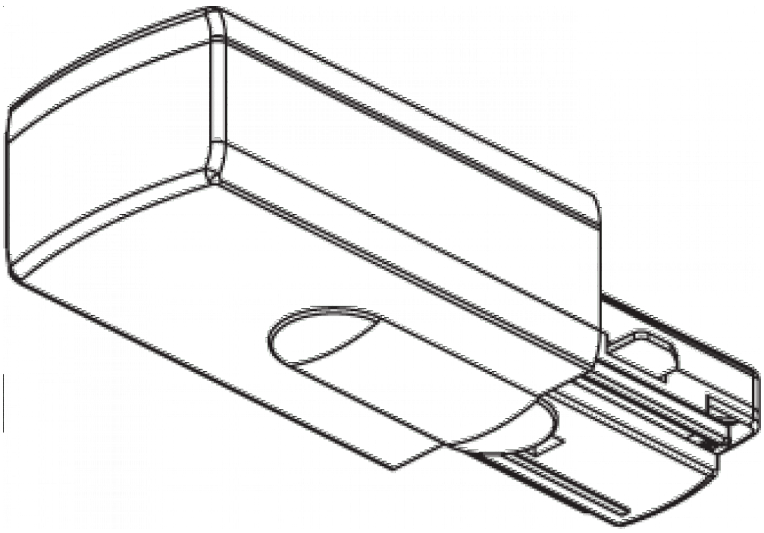

Available colours

White **Black**

Compatible tracks: GB, GBF. Select the exact reference according to function, installation and technical drawing. The image shows a representative version; check the selected reference in the technical document for earth orientation and configuration.

Manufacturer references: GB 12-2, GB 12-3.

GB PDF GBF PDF

The power and luminous flux ranges are calculated separately from the listed variants. For an exact combination, see the code details on the site.

See all variants on bright.gr >

Technical characteristics

Common data

Characteristics that apply to all versions of GB 12.

Housing	—	Control Gear	—
Optic	—	Accessories	—

See all variants on bright.gr >