SP 4X

0 variants

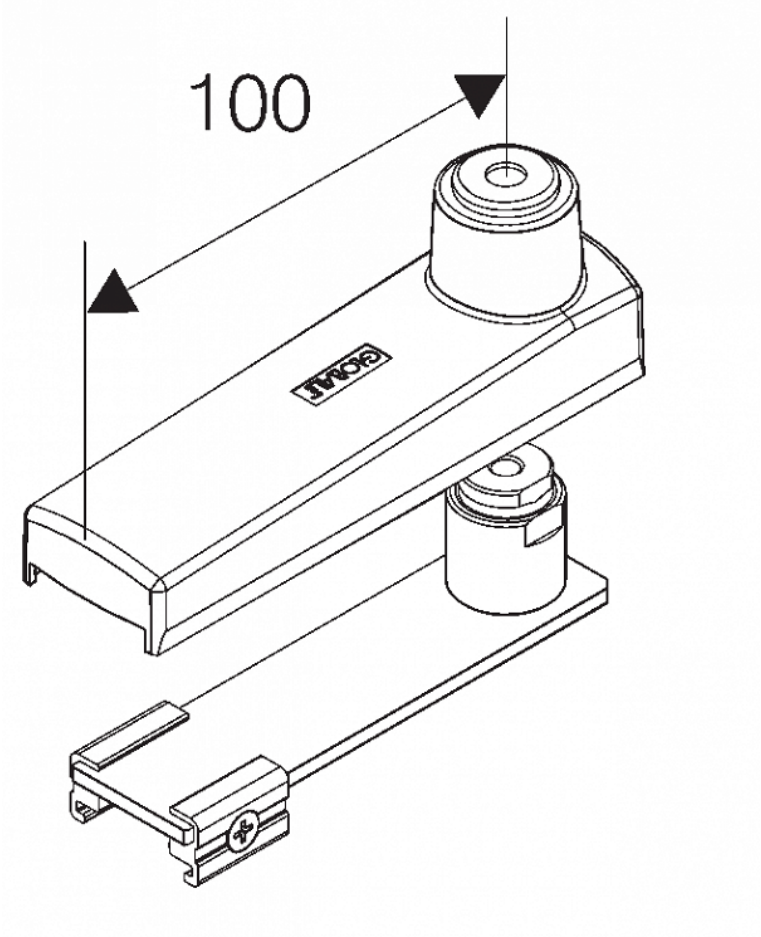

Compatible tracks: XTS. Select the exact reference according to function, installation and technical drawing. The image shows a representative version; check the selected reference in the technical document for earth orientation and configuration.

Manufacturer references: SP 4X.

XTS PDF

The power and luminous flux ranges are calculated separately from the listed variants. For an exact combination, see the code details on the site.

See all variants on bright.gr >

Technical characteristics

Common data

Characteristics that apply to all versions of SP 4X.

Housing	—	Control Gear	—
Optic	—	Accessories	—

See all variants on bright.gr >