CERNO 4 IP65 LED



Technical drawings

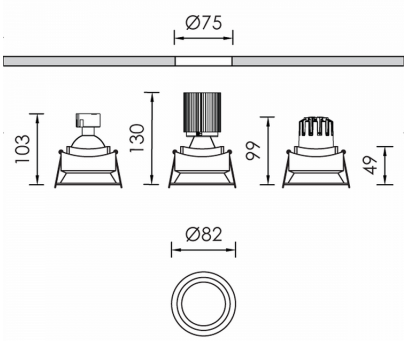

Product Details

CE LM80 LM79 TM21 REACH Source Type COB LED

General Information

Housing	Plastic
Product code	DL1338CL001ON
Product family	CERNO
Diffuser	Safety Glass Clear
Control Gear	Remote Electronic Driver
Options for Dimming Control	On-Off
Height	99 mm
Diameter	82 mm

Electrical data

Consumption	9,2 W
Performance	90.22 lm/W
Ripple	3
Power Factor	0.96
Nominal Voltage	34.6 V

Luminaire Output

Beam Type	N
Beam	17º
Luminous Flux	830 lm
CRI CCT	940

Light distribution

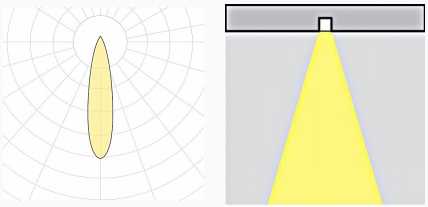

Safety characteristics

IK	05
IP	65
Protection Class	Class III

Temperature Operating Conditions

Lifetime	>60.000h L80B10@35°C
Operating Ambient Temperature	-10...+45°C
Operating Humidity Level	5...95%