NOTUS 16 UGR UP DOWN



Technical drawings

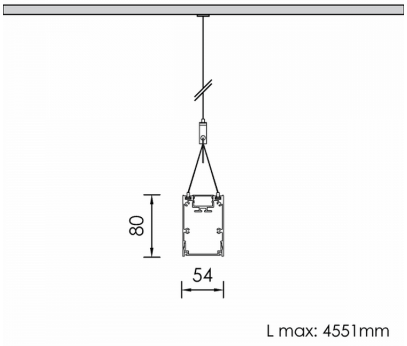

Product Details

CE LM80 LM79 TM21 REACH Source Type Linear LED

General Information

Housing	Aluminium
Product code	PRS0387CL002ON
Product family	NOTUS
Diffuser	PMMA
Control Gear	Built-in ECG
Options for Dimming Control	On-Off
Width	54 mm
Length	3956 mm
Height	80 mm

Electrical data

Consumption	149,3 W
Performance	104.97 lm/W
Ripple	3
Power Factor	0.96
Nominal Voltage	230 V

Luminaire Output

Beam Type	XW
Beam	73º
Luminous Flux	15672 lm
CRI CCT	930
Glare Indicator Ugr Longwise Optics	15
Glare Indicator Ugr Parallel Optics	16

Light distribution

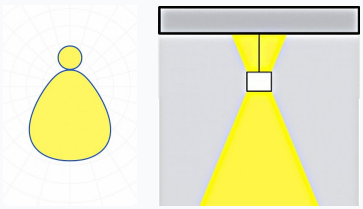

Safety characteristics

IK	04
IP	40
Protection Class	Class I

Temperature Operating Conditions

Lifetime	>100.000h L80B10@35°C
Operating Ambient Temperature	-10...+45°C
Operating Humidity Level	5...95%