# NOTUS 16 LENS SP



## Technical drawings

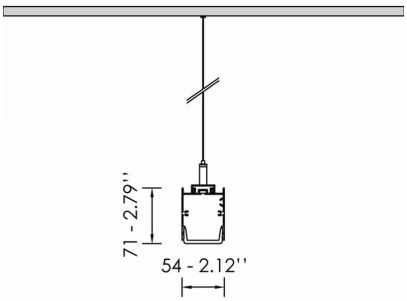


## Product Details

CE LM80 LM79 TM21 REACH Source Type Linear LED

### General Information

| | |
|---|---|
| Housing | Acoustic Panel |
| Product code | PRS0555CL001DA |
| Product family | NOTUS |
| Diffuser | PMMA |
| Control Gear | Built-in ECG |
| Options for Dimming Control | DALI2 |
| Width | 54 mm |
| Length | 600 mm |
| Height | 71 mm |

### Electrical data

| | |
|---|---|
| Consumption | 17,2 W |
| Performance | 120.93 lm/W |
| Ripple | 3 |
| Power Factor | 0.96 |
| Nominal Voltage | 230 V |

### Luminaire Output

| | |
|---|---|
| Beam Type | INTENSE |
| Luminous Flux | 2080 lm |
| CRI CCT | 930 |
| Glare Indicator Ugr Longwise Optics | 20 |
| Glare Indicator Ugr Parallel Optics | 27 |

### Light distribution

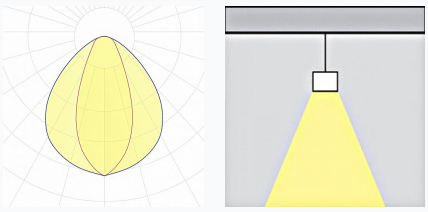

### Safety characteristics

| | |
|---|---|
| IK | 04 |
| IP | 40 |
| Protection Class | Class I |

### Temperature Operating Conditions

| | |
|---|---|
| Lifetime | >80.000h L80B10@35°C |
| Operating Ambient Temperature | -10...+45°C |
| Operating Humidity Level | 5...95% |