NOTUS 16 LENS SP



Technical drawings

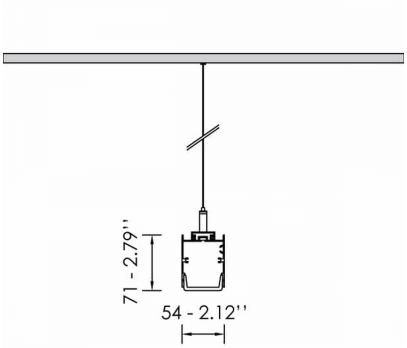

Product Details

CE LM80 LM79 TM21 REACH Source Type Linear LED

General Information

Housing	Aluminium
Product code	PRS0556CL003ON
Product family	NOTUS
Control Gear	Built-in ECG
Options for Dimming Control	On-Off
Width	54 mm
Length	885 mm
Height	71 mm

Electrical data

Consumption	25,8 W
Performance	120.93 lm/W
Ripple	3
Power Factor	0.96
Nominal Voltage	230 V

Luminaire Output

Beam Type	INTENSE
Luminous Flux	3120 lm
CRI CCT	930
Glare Indicator Ugr Longwise Optics	20
Glare Indicator Ugr Parallel Optics	27

Light distribution

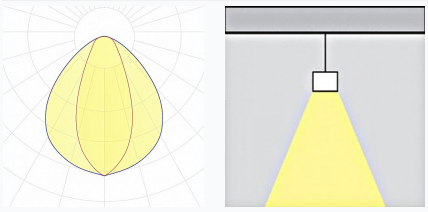

Safety characteristics

IK	04
IP	40
Protection Class	Class I

Temperature Operating Conditions

Lifetime	>80.000h L80B10@35°C
Operating Ambient Temperature	-10...+45°C
Operating Humidity Level	5...95%