NOTUS 16 UP DOWN SP OPAL



Technical drawings

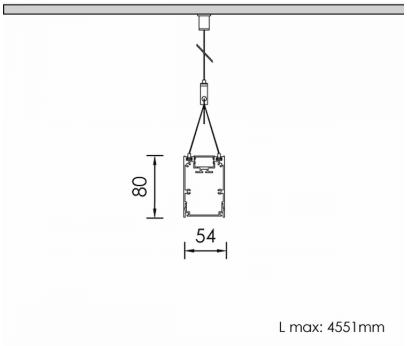

L max: 4551mm

Product Details

CE LM80 LM79 TM21 REACH Source Type Linear LED

General Information

Housing	Aluminium
Product code	PRS0747CL002ON
Product family	NOTUS
Diffuser	PMMA
Control Gear	Built-in ECG
Options for Dimming Control	On-Off
Width	54 mm
Length	3986 mm
Height	80 mm

Electrical data

Consumption	236,4 W
Performance	88.8 lm/W
Ripple	3
Power Factor	0.96
Nominal Voltage	230 V

Luminaire Output

Beam Type	VW
Beam	360º
Luminous Flux	20992 lm
CRI CCT	930
Glare Indicator Ugr Longwise Optics	20
Glare Indicator Ugr Parallel Optics	21

Light distribution

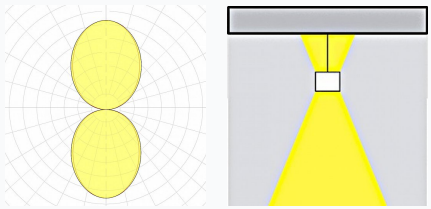

Safety characteristics

IK	04
IP	40
Protection Class	Class I

Temperature Operating Conditions

Lifetime	>80.000h L80B10@35°C
Operating Ambient Temperature	-10...+45°C
Operating Humidity Level	5...95%