NOTUS 5 CROSS SP



Technical drawings

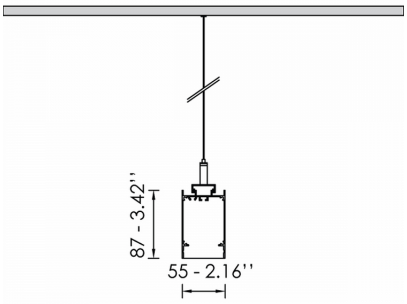

Product Details

CE LM80 LM79 TM21 REACH Source Type Linear LED

General Information

Housing	Aluminium
Product code	PRS0839CL001ON
Product family	NOTUS
Diffuser	PMMA
Control Gear	Built-in ECG
Options for Dimming Control	On-Off
Width	55 mm
Length	4523 mm
Height	87 mm

Electrical data

Consumption	90,7 W
Performance	65.01 lm/W
Ripple	3
Power Factor	0.96
Nominal Voltage	230 V

Luminaire Output

Beam Type	ASY
Beam	87º
Luminous Flux	5896 lm
CRI CCT	930
Glare Indicator Ugr Longwise Optics	15
Glare Indicator Ugr Parallel Optics	18

Light distribution

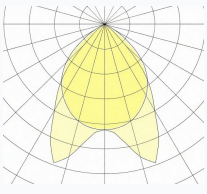

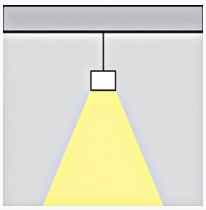

Safety characteristics

IK	04
IP	20
Protection Class	Class I

Temperature Operating Conditions

Lifetime	>80.000h L80B10@35°C
Operating Ambient Temperature	-10...+45°C
Operating Humidity Level	5...95%