NOTUS 5 CROSS SP



Technical drawings

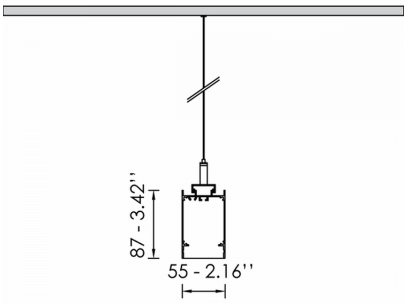

Product Details

CE LM80 LM79 TM21 REACH Source Type Linear LED

General Information

Housing	Aluminium
Product code	PRS0867CL003DAC
Product family	NOTUS
Control Gear	Built-in ECG
Options for Dimming Control	DALI2
Options for Wireless Dimming	Casambi
Width	55 mm
Length	3962 mm
Height	87 mm

Electrical data

Consumption	118,2 W
Performance	65 lm/W
Ripple	3
Power Factor	0.96
Nominal Voltage	230 V

Luminaire Output

Beam Type	ASY
Beam	87º
Luminous Flux	7683 lm
CRI CCT	930
Glare Indicator Ugr Longwise Optics	16
Glare Indicator Ugr Parallel Optics	20

Light distribution

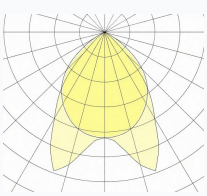

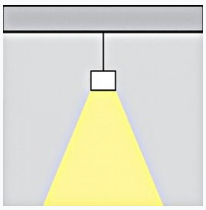

Safety characteristics

IK	04
IP	20
Protection Class	Class I

Temperature Operating Conditions

Lifetime	>80.000h L80B10@35°C
Operating Ambient Temperature	-10...+45°C
Operating Humidity Level	5...95%