NOTUS 5 CROSS SP



Technical drawings

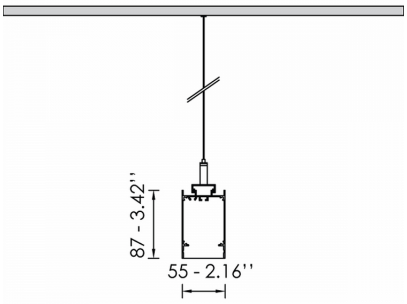

Product Details

CE LM80 LM79 TM21 REACH Source Type Linear LED

General Information

Housing	Aluminium
Product code	PRS0883CL002DA
Product family	NOTUS
Diffuser	PMMA
Control Gear	Built-in ECG
Options for Dimming Control	DALI2
Width	55 mm
Length	4242 mm
Height	87 mm

Electrical data

Consumption	126,7 W
Performance	75 lm/W
Ripple	3
Power Factor	0.96
Nominal Voltage	230 V

Luminaire Output

Beam Type	ASY
Beam	87º
Luminous Flux	9503 lm
CRI CCT	940
Glare Indicator Ugr Longwise Optics	17
Glare Indicator Ugr Parallel Optics	20

Light distribution

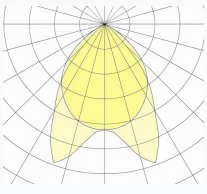

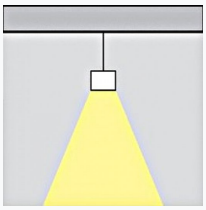

Safety characteristics

IK	04
IP	20
Protection Class	Class I

Temperature Operating Conditions

Lifetime	>80.000h L80B10@35°C
Operating Ambient Temperature	-10...+45°C
Operating Humidity Level	5...95%