NOTUS 1 SP



Technical drawings

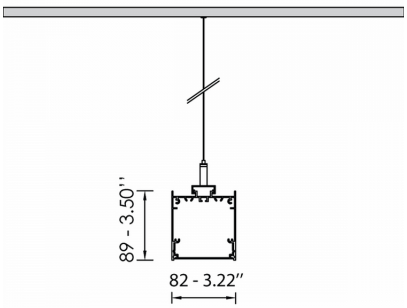

Product Details

CE LM80 LM79 TM21 REACH Source Type Linear LED

General Information

Housing	Aluminium
Product code	PRS1226CL002ON
Product family	NOTUS
Diffuser	PMMA
Control Gear	Built-in ECG
Options for Dimming Control	On-Off
Width	82 mm
Length	3660 mm
Height	89 mm

Electrical data

Consumption	109,8 W
Performance	101.44 lm/W
Ripple	3
Power Factor	0.96
Nominal Voltage	230 V

Luminaire Output

Beam Type	VW
Beam	116º
Luminous Flux	11138 lm
CRI CCT	930
Glare Indicator Ugr Longwise Optics	24
Glare Indicator Ugr Parallel Optics	25

Light distribution

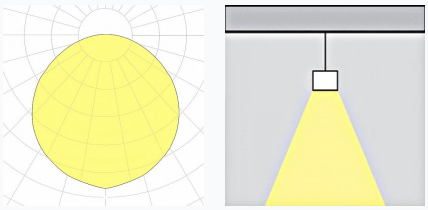

Safety characteristics

IK	04
IP	40
Protection Class	Class I

Temperature Operating Conditions

Lifetime	>80.000h L80B10@35°C
Operating Ambient Temperature	-10...+45°C
Operating Humidity Level	5...95%