# NOTUS 1 SP



## Technical drawings

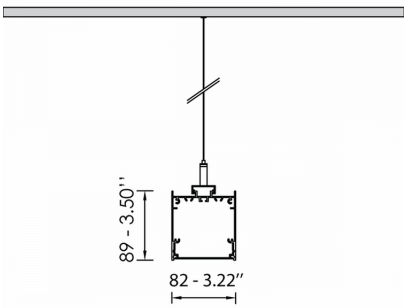


## Product Details

CE LM80 LM79 TM21 REACH Source Type Linear LED

### General Information

| | |
|---|---|
| Housing | Aluminium |
| Product code | PRS1226CL003DA |
| Product family | NOTUS |
| Diffuser | PMMA |
| Control Gear | Built-in ECG |
| Options for Dimming Control | DALI2 |
| Width | 82 mm |
| Length | 3660 mm |
| Height | 89 mm |

### Electrical data

| | |
|---|---|
| Consumption | 109,8 W |
| Performance | 101.44 lm/W |
| Ripple | 3 |
| Power Factor | 0.96 |
| Nominal Voltage | 230 V |

### Luminaire Output

| | |
|---|---|
| Beam Type | VW |
| Beam | 116º |
| Luminous Flux | 11138 lm |
| CRI CCT | 930 |
| Glare Indicator Ugr Longwise Optics | 24 |
| Glare Indicator Ugr Parallel Optics | 25 |

### Light distribution

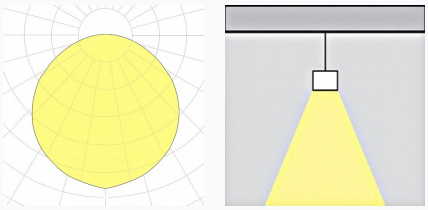

### Safety characteristics

| | |
|---|---|
| IK | 04 |
| IP | 40 |
| Protection Class | Class I |

### Temperature Operating Conditions

| | |
|---|---|
| Lifetime | >80.000h L80B10@35°C |
| Operating Ambient Temperature | -10...+45°C |
| Operating Humidity Level | 5...95% |