NOTUS 1 UGR SP



Technical drawings

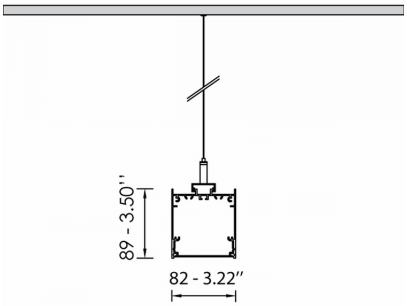

Product Details

CE LM80 LM79 TM21 REACH Source Type Linear LED

General Information

Housing	Aluminium
Product code	PRS1254CL002DAC
Product family	NOTUS
Diffuser	PMMA
Control Gear	Built-in ECG
Options for Dimming Control	DALI2
Options for Wireless Dimming	Casambi
Width	82 mm
Length	3120 mm
Height	89 mm

Electrical data

Consumption	55 W
Performance	123.93 lm/W
Ripple	3
Power Factor	0.96
Nominal Voltage	230 V

Luminaire Output

Beam Type	XW
Beam	78º
Luminous Flux	6816 lm
CRI CCT	930
Glare Indicator Ugr Longwise Optics	17
Glare Indicator Ugr Parallel Optics	18

Light distribution

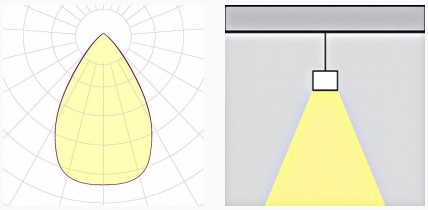

Safety characteristics

IK	04
IP	40
Protection Class	Class I

Temperature Operating Conditions

Lifetime	>100.000h L80B10@35°C
Operating Ambient Temperature	-10...+45°C
Operating Humidity Level	5...95%