NOTUS 1 CROSS SP



Technical drawings

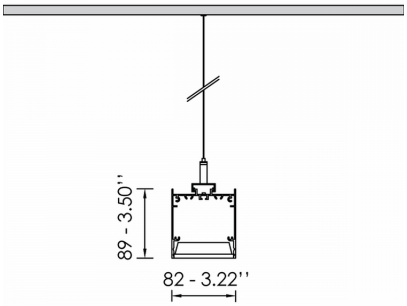

Product Details

CE LM80 LM79 TM21 REACH Source Type Linear LED

General Information

Housing	Aluminium
Product code	PRS1275CL003DAC
Product family	NOTUS
Diffuser	PMMA
Control Gear	Built-in ECG
Options for Dimming Control	DALI2
Options for Wireless Dimming	Casambi
Width	82 mm
Length	596 mm
Height	89 mm

Electrical data

Consumption	11,3 W
Performance	65.04 lm/W
Ripple	3
Power Factor	0.96
Nominal Voltage	230 V

Luminaire Output

Beam Type	XW
Beam	87º
Luminous Flux	735 lm
CRI CCT	930

Light distribution

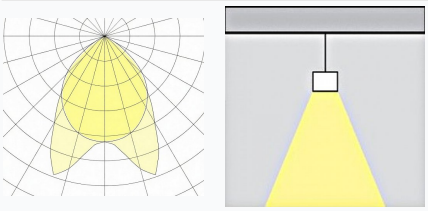

Safety characteristics

IK	04
IP	20
Protection Class	Class I

Temperature Operating Conditions

Lifetime	>80.000h L80B10@35°C
Operating Ambient Temperature	-10...+45°C
Operating Humidity Level	5...95%