HEADOFFICE: Showroom 13 Sofokli Venizelou Ave., Likovrisi, P.O. Box 14123, Athens, Greece Tel: (+30) 210 2851 304 I www.bright.gr I info@bright.gr

# NOTUS 1 SQUARE SP



## Technical drawings

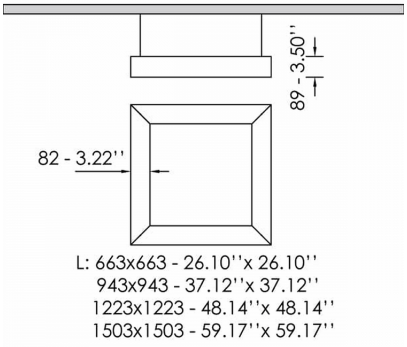


## Product Details

CE LM80 LM79 TM21 REACH Source Type Linear LED

### General Information

| | |
|---|---|
| Housing | Aluminium |
| Product code | PRS1358CL003ON |
| Product family | NOTUS |
| Diffuser | PMMA |
| Control Gear | Built-in ECG |
| Options for Dimming Control | On-Off |
| Width | 663 mm |
| Length | 663 mm |
| Height | 89 mm |

### Electrical data

| | |
|---|---|
| Consumption | 45,2 W |
| Performance | 101.06 lm/W |
| Ripple | 3 |
| Power Factor | 0.96 |
| Nominal Voltage | 230 V |

### Luminaire Output

| | |
|---|---|
| Beam Type | VW |
| Beam | 116º |
| Luminous Flux | 4568 lm |
| CRI CCT | 940 |

### Light distribution

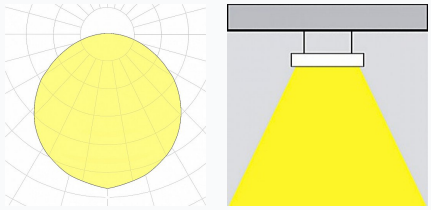

### Safety characteristics

| | |
|---|---|
| IK | 04 |
| IP | 40 |
| Protection Class | Class I |

### Temperature Operating Conditions

| | |
|---|---|
| Lifetime | >80.000h L80B10@35°C |
| Operating Ambient Temperature | -10...+45°C |
| Operating Humidity Level | 5...95% |