NOTUS 17 UP TRACK SP



Technical drawings

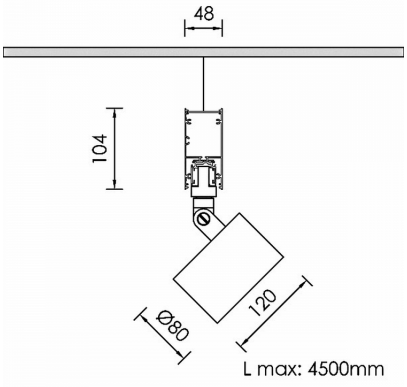

Product Details

CE LM80 LM79 TM21 REACH Source Type Linear LED

General Information

Housing	Aluminium
Product code	PRS1632CL003DA
Product family	NOTUS
Diffuser	Anti-Glare PC Shade
Control Gear	Built-in ECG
Options for Dimming Control	DALI2
Width	48 mm
Length	1700 mm
Height	104 mm

Electrical data

Consumption	50,7 W
Performance	95.01 lm/W
Ripple	3
Power Factor	0.96
Nominal Voltage	230 V

Luminaire Output

Beam Type	VW
Beam	360º
Luminous Flux	4817 lm
CRI CCT	940

Light distribution

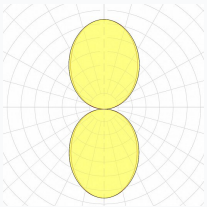

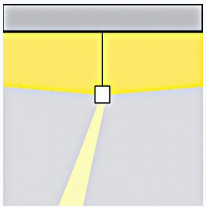

Safety characteristics

IK	04
IP	40
Protection Class	Class I

Temperature Operating Conditions

Lifetime	>80.000h L80B10@35°C
Operating Ambient Temperature	-10...+45°C
Operating Humidity Level	5...95%