NOTUS 13 SP



Technical drawings

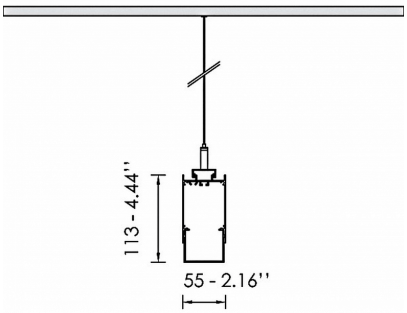

Product Details

CE LM80 LM79 TM21 REACH Source Type Linear LED

General Information

Housing	Aluminium
Product code	PRS1905CL002DA
Product family	NOTUS
Diffuser	PMMA
Control Gear	Built-in ECG
Options for Dimming Control	DALI2
Width	55 mm
Length	2291 mm
Height	113 mm

Electrical data

Consumption	67,6 W
Performance	107.03 lm/W
Ripple	3
Power Factor	0.96
Nominal Voltage	230 V

Luminaire Output

Beam Type	VW
Beam	149º
Luminous Flux	7235 lm
CRI CCT	940
Glare Indicator Ugr Longwise Optics	29
Glare Indicator Ugr Parallel Optics	21

Light distribution

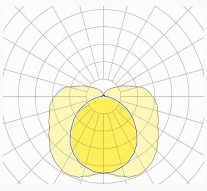

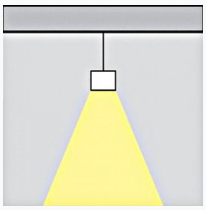

Safety characteristics

IK	04
IP	40
Protection Class	Class I

Temperature Operating Conditions

Lifetime	>80.000h L80B10@35°C
Operating Ambient Temperature	-10...+45°C
Operating Humidity Level	5...95%