FUGA 2 HEXAGON



Technical drawings

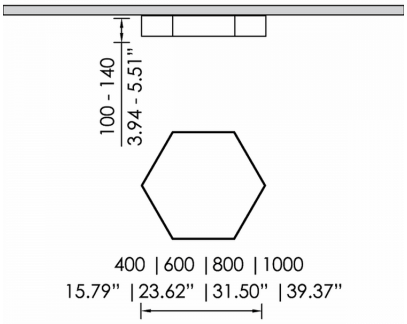

Product Details

CE LM80 LM79 TM21 REACH Source Type Linear LED

General Information

Housing	Aluminium
Product code	PRC0012CL001DA
Product family	FUGA
Diffuser	PMMA
Control Gear	Built-in ECG
Options for Dimming Control	DALI2
Height	140 mm
Diameter	1000 mm

Electrical data

Consumption	121,9 W
Performance	84.59 lm/W
Ripple	3
Power Factor	0.96
Nominal Voltage	230 V

Luminaire Output

Luminous Flux	10311 lm
CRI CCT	930

Light distribution

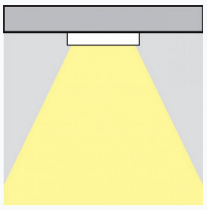

Safety characteristics

IK	04
IP	40
Protection Class	Class I

Temperature Operating Conditions

Lifetime	>50.000h L70B10@35°C
Operating Ambient Temperature	-10...+45°C
Operating Humidity Level	5...95%