COMIS OUT LENS TAPE



Technical drawings

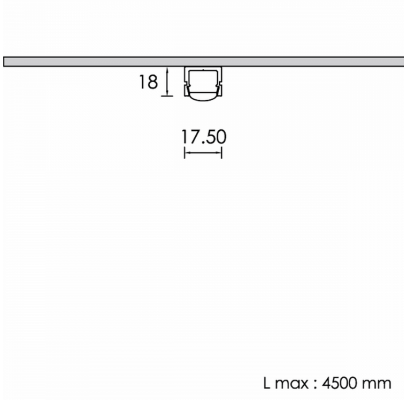

Product Details

CE LM80 LM79 TM21 REACH Source Type Linear LED

General Information

Housing	Aluminium
Product code	PRC1521CL001DAC
Product family	COMIS
Diffuser	Polycarbonate
Control Gear	Remote Electronic Driver
Options for Dimming Control	DALI2
Options for Wireless Dimming	Casambi
Width	17.5 mm
Length	100 mm
Height	18 mm

Electrical data

Consumption	0,96 W
Performance	105.21 lm/W
Ripple	3
Power Factor	0.96
Nominal Voltage	24 V

Luminaire Output

Beam Type	VW
Beam	119º
Luminous Flux	101 lm
CRI CCT	940
Glare Indicator Ugr Longwise Optics	22
Glare Indicator Ugr Parallel Optics	26

Light distribution

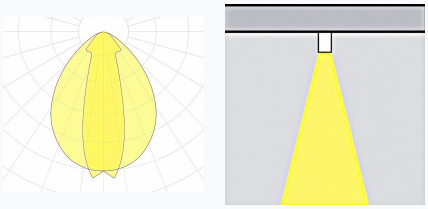

Safety characteristics

IK	05
IP	40
Protection Class	Class III

Temperature Operating Conditions

Lifetime	>50.000h L70B10@35°C
Operating Ambient Temperature	-10...+45°C
Operating Humidity Level	5...95%