# COMIS OUT LENS TAPE



## Technical drawings

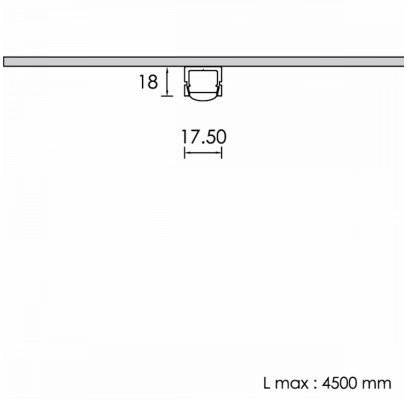


## Product Details

CE LM80 LM79 TM21 REACH Source Type Linear LED

### General Information

| | |
|---|---|
| Housing | Aluminium |
| Product code | PRC1522CL001ON |
| Product family | COMIS |
| Diffuser | PMMA |
| Control Gear | Remote Electronic Driver |
| Options for Dimming Control | On-Off |
| Width | 17.5 mm |
| Length | 100 mm |
| Height | 18 mm |

### Electrical data

| | |
|---|---|
| Consumption | 1,44 W |
| Performance | 105.56 lm/W |
| Ripple | 3 |
| Power Factor | 0.96 |
| Nominal Voltage | 24 V |

### Luminaire Output

| | |
|---|---|
| Beam Type | VW |
| Beam | 119º |
| Luminous Flux | 152 lm |
| CRI CCT | 940 |
| Glare Indicator Ugr Longwise Optics | 24 |
| Glare Indicator Ugr Parallel Optics | 27 |

### Light distribution

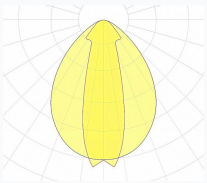

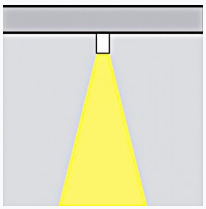

### Safety characteristics

| | |
|---|---|
| IK | 05 |
| IP | 40 |
| Protection Class | Class III |

### Temperature Operating Conditions

| | |
|---|---|
| Lifetime | >50.000h L70B10@35°C |
| Operating Ambient Temperature | -10...+45°C |
| Operating Humidity Level | 5...95% |