NOTUS 16 IN INTENSE



Technical drawings

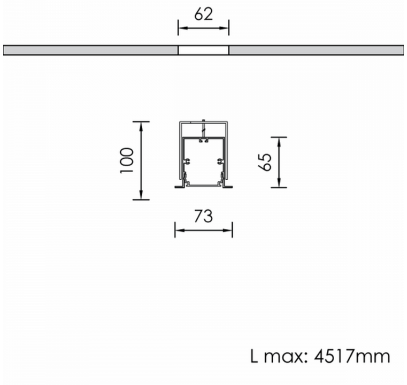

Product Details

CE LM80 LM79 TM21 REACH Source Type Linear LED

General Information

Housing	Aluminium
Product code	PRR0276CL001ON
Product family	NOTUS
Diffuser	ANTI-GLARE PMMA
Control Gear	Built-in ECG
Options for Dimming Control	On-Off
Width	73 mm
Length	2015 mm
Height	100 mm

Electrical data

Consumption	44 W
Performance	115.25 lm/W
Ripple	3
Power Factor	0.96
Nominal Voltage	230 V

Luminaire Output

Beam Type	XW
Beam	62º
Luminous Flux	5071 lm
CRI CCT	930
Glare Indicator Ugr Longwise Optics	19
Glare Indicator Ugr Parallel Optics	26

Light distribution

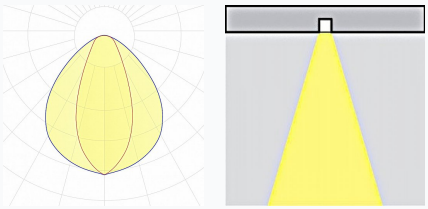

Safety characteristics

IK	04
IP	40
Protection Class	Class I

Temperature Operating Conditions

Lifetime	>100.000h L80B10@35°C
Operating Ambient Temperature	-10...+45°C
Operating Humidity Level	5...95%