NOTUS 25 TRIMLESS A

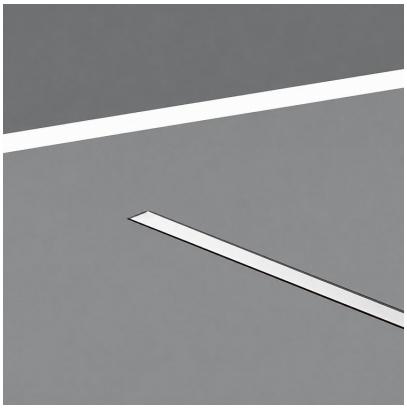

Technical drawings

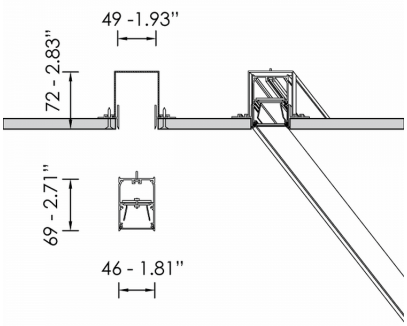

Product Details

CE LM80 LM79 TM21 REACH Source Type Linear LED

General Information

Housing	Aluminium
Product code	PRT0070CL002DA
Product family	NOTUS
Diffuser	PMMA
Control Gear	Built-in ECG
Options for Dimming Control	DALI2
Width	49 mm
Length	2841 mm
Height	72 mm

Electrical data

Consumption	84,4 W
Performance	80.37 lm/W
Ripple	3
Power Factor	0.96
Nominal Voltage	230 V

Luminaire Output

Beam Type	VW
Beam	104º
Luminous Flux	6783 lm
CRI CCT	940
Glare Indicator Ugr Longwise Optics	25
Glare Indicator Ugr Parallel Optics	26

Light distribution

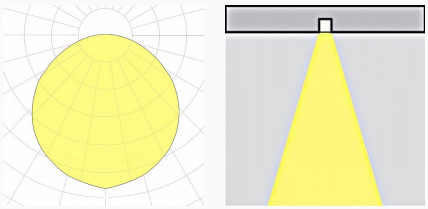

Safety characteristics

IK	04
IP	54
Protection Class	Class I

Temperature Operating Conditions

Lifetime	>80.000h L80B10@35°C
Operating Ambient Temperature	-10...+45°C
Operating Humidity Level	5...95%