HEADOFFICE: Showroom 13 Sofokli Venizelou Ave., Likovrisi, P.O. Box 14123, Athens, Greece Tel: (+30) 210 2851 304 I www.bright.gr I info@bright.gr

NOTUS 25 TRIMLESS B



Technical drawings

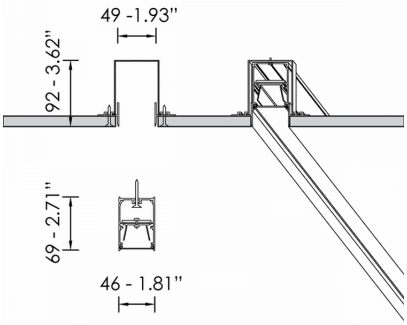

Product Details

CE LM80 LM79 TM21 REACH Source Type Linear LED

General Information

Housing	Aluminium
Product code	PRT0097CL001DAC
Product family	NOTUS
Diffuser	PMMA
Control Gear	Built-in ECG
Options for Dimming Control	DALI2
Options for Wireless Dimming	Casambi
Width	49 mm
Length	1996 mm
Height	92 mm

Electrical data

Consumption	39,7 W
Performance	80.03 lm/W
Ripple	3
Power Factor	0.96
Nominal Voltage	230 V

Luminaire Output

Beam Type	VW
Beam	104º
Luminous Flux	3177 lm
CRI CCT	940
Glare Indicator Ugr Longwise Optics	24
Glare Indicator Ugr Parallel Optics	24

Light distribution

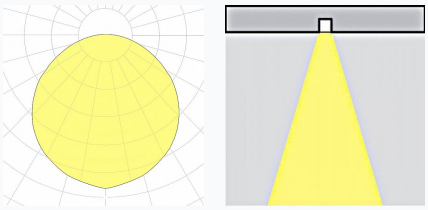

Safety characteristics

IK	04
IP	54
Protection Class	Class I

Temperature Operating Conditions

Lifetime	>80.000h L80B10@35°C
Operating Ambient Temperature	-10...+45°C
Operating Humidity Level	5...95%