NOTUS 25 TRIMLESS B



Technical drawings

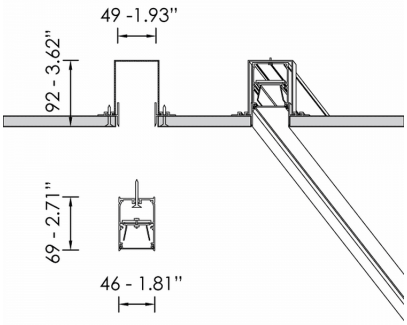

Product Details

CE LM80 LM79 TM21 REACH Source Type Linear LED

General Information

Housing	Aluminium
Product code	PRT0118CL003ON
Product family	NOTUS
Diffuser	PMMA
Control Gear	Built-in ECG
Options for Dimming Control	On-Off
Width	49 mm
Length	3691 mm
Height	92 mm

Electrical data

Consumption	109,8 W
Performance	76.08 lm/W
Ripple	3
Power Factor	0.96
Nominal Voltage	230 V

Luminaire Output

Beam Type	VW
Beam	104º
Luminous Flux	8354 lm
CRI CCT	930
Glare Indicator Ugr Longwise Optics	25
Glare Indicator Ugr Parallel Optics	26

Light distribution

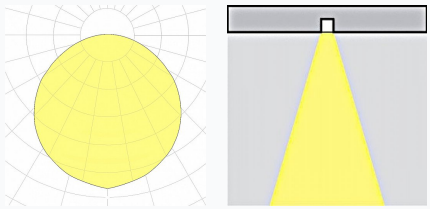

Safety characteristics

IK	04
IP	54
Protection Class	Class I

Temperature Operating Conditions

Lifetime	>80.000h L80B10@35°C
Operating Ambient Temperature	-10...+45°C
Operating Humidity Level	5...95%