NOVUS IN CHANNEL SPOT HP LED



Technical drawings

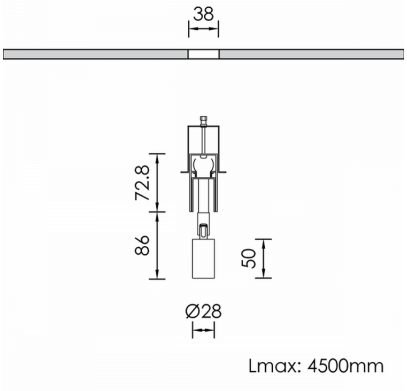

Product Details

CE LM80 LM79 TM21 REACH Source Type H.P. LED

General Information

Housing	Aluminium
Product code	PRR0749CL001
Product family	NOVUS
Control Gear	Built-in ECG
Height	72.8 mm

Electrical data

Luminaire Output

Light distribution

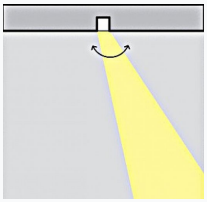

Safety characteristics

IK	04
IP	20
Protection Class	Class III

Temperature Operating Conditions

Lifetime	>60.000h L80B10@35°C
Operating Ambient Temperature	-10...+45°C
Operating Humidity Level	5...95%