SEDO NOTUS 16 DOWN



Technical drawings

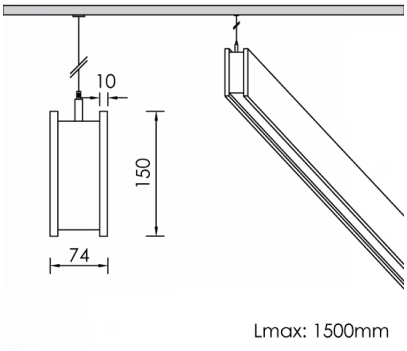

Product Details

CE LM80 LM79 TM21 REACH Source Type Linear LED

General Information

Housing	Acoustic Panel
Product code	PRA0024CL011DAC
Product family	NOTUS
Diffuser	PMMA
Control Gear	Built-in ECG
Options for Dimming Control	DALI2
Options for Wireless Dimming	Casambi
Width	74 mm
Length	2820 mm
Height	150 mm

Electrical data

Consumption	56,7 W
Performance	95.01 lm/W
Ripple	3
Power Factor	0.96
Nominal Voltage	230 V

Luminaire Output

Beam Type	VW
Beam	104º
Luminous Flux	5387 lm
CRI CCT	940
Glare Indicator Ugr Longwise Optics	24
Glare Indicator Ugr Parallel Optics	25

Light distribution

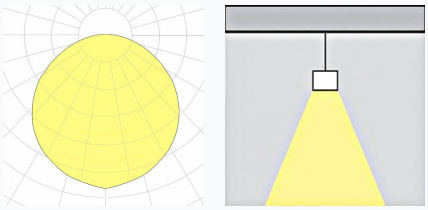

Safety characteristics

IK	04
IP	40
Protection Class	Class I

Temperature Operating Conditions

Lifetime	>80.000h L80B10@35°C
Operating Ambient Temperature	-10...+45°C
Operating Humidity Level	5...95%