SEDO NOTUS 16 DOWN



Technical drawings

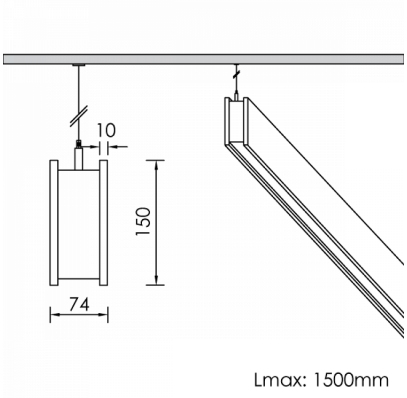

Product Details

CE LM80 LM79 TM21 REACH Source Type Linear LED

General Information

Housing	Acoustic Panel
Product code	PRA0040CL011DA
Product family	NOTUS
Diffuser	PMMA
Control Gear	Built-in ECG
Options for Dimming Control	DALI2
Width	74 mm
Length	3100 mm
Height	150 mm

Electrical data

Consumption	92,9 W
Performance	90 lm/W
Ripple	3
Power Factor	0.96
Nominal Voltage	230 V

Luminaire Output

Beam Type	VW
Beam	104º
Luminous Flux	8361 lm
CRI CCT	930
Glare Indicator Ugr Longwise Optics	26
Glare Indicator Ugr Parallel Optics	26

Light distribution

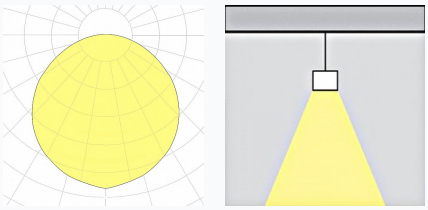

Safety characteristics

IK	04
IP	40
Protection Class	Class I

Temperature Operating Conditions

Lifetime	>80.000h L80B10@35°C
Operating Ambient Temperature	-10...+45°C
Operating Humidity Level	5...95%