# SEDO STATUR SMALL



## Technical drawings

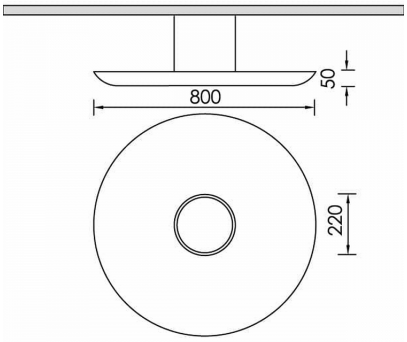


## Product Details

CE LM80 LM79 TM21 REACH Source Type SMD LED

### General Information

| | |
|---|---|
| Housing | Acoustic Panel |
| Product code | PRA0121CL013DAC |
| Product family | STATUR |
| Diffuser | PMMA |
| Control Gear | Remote Electronic Driver |
| Options for Dimming Control | DALI2 |
| Options for Wireless Dimming | Casambi |
| Height | 50 mm |

### Electrical data

| | |
|---|---|
| Consumption | 16,2 W |
| Performance | 105.74 lm/W |
| Ripple | 3 |
| Power Factor | 0.96 |
| Nominal Voltage | 36.2 V |

### Luminaire Output

| | |
|---|---|
| Beam Type | VW |
| Beam | 118º |
| Luminous Flux | 1713 lm |
| CRI CCT | 930 |

### Light distribution

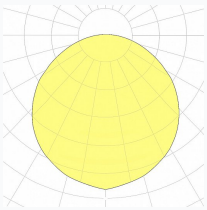

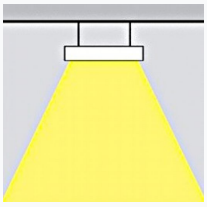

### Safety characteristics

| | |
|---|---|
| IK | 04 |
| IP | 54 |
| Protection Class | Class III |

### Temperature Operating Conditions

| | |
|---|---|
| Lifetime | >50.000h L80B10@35°C |
| Operating Ambient Temperature | -10...+45°C |
| Operating Humidity Level | 5...95% |