SEDO STATUR SMALL



Technical drawings

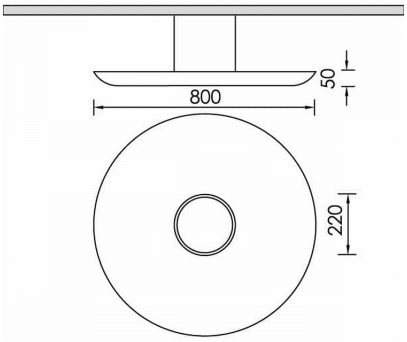

Product Details

CE LM80 LM79 TM21 REACH Source Type SMD LED

General Information

Housing	Acoustic Panel
Product code	PRA0124CL002ON
Product family	STATUR
Diffuser	PMMA
Control Gear	Remote Electronic Driver
Options for Dimming Control	On-Off
Height	50 mm

Electrical data

Consumption	24,2 W
Performance	98.14 lm/W
Ripple	3
Power Factor	0.96
Nominal Voltage	36.2 V

Luminaire Output

Beam Type	VW
Beam	118º
Luminous Flux	2375 lm
CRI CCT	930

Light distribution

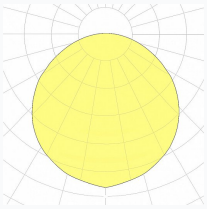

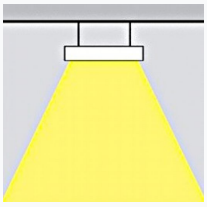

Safety characteristics

IK	04
IP	54
Protection Class	Class III

Temperature Operating Conditions

Lifetime	>50.000h L80B10@35°C
Operating Ambient Temperature	-10...+45°C
Operating Humidity Level	5...95%