FUGA 2 RING SEDO SP UP DOWN



Technical drawings

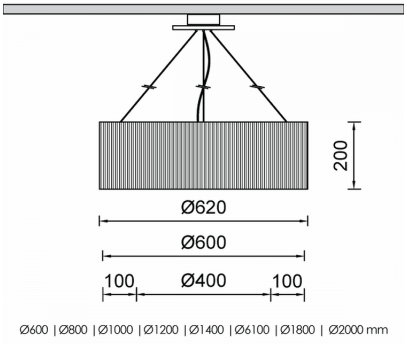

Ø600 | Ø800 | Ø1000 | Ø1200 | Ø1400 | Ø6100 | Ø1800 | Ø2000 mm

Product Details

CE LM80 LM79 TM21 REACH Source Type Linear LED

General Information

Housing	Acoustic Panel
Product code	PRA0178CL016ON
Product family	FUGA
Diffuser	PMMA
Control Gear	Built-in ECG
Options for Dimming Control	On-Off
Height	200 mm

Electrical data

Consumption	265,5 W
Performance	63 lm/W
Ripple	3
Power Factor	0.96
Nominal Voltage	230 V

Luminaire Output

Beam Type	VW
Beam	360º
Luminous Flux	16727 lm
CRI CCT	940
Glare Indicator Ugr Longwise Optics	10
Glare Indicator Ugr Parallel Optics	11

Light distribution

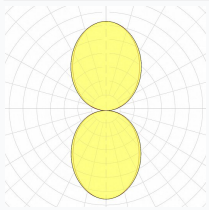



Safety characteristics

IK	04
IP	40
Protection Class	Class I

Temperature Operating Conditions

Lifetime	>80.000h L80B10@35°C
Operating Ambient Temperature	-10...+45°C
Operating Humidity Level	5...95%