SEDO 2 NOTUS 14 UP DOWN



Technical drawings

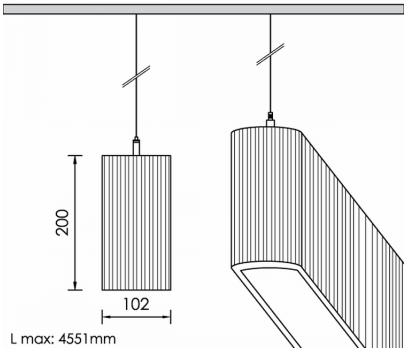

Product Details

CE LM80 LM79 TM21 REACH Source Type Linear LED

General Information

Housing	Acoustic Panel
Product code	PRA0205CL012ON
Product family	NOTUS
Diffuser	PMMA
Control Gear	Built-in ECG
Options for Dimming Control	On-Off
Width	102 mm
Length	3441 mm
Height	200 mm

Electrical data

Consumption	136 W
Performance	88.2 lm/W
Ripple	3
Power Factor	0.96
Nominal Voltage	230 V

Luminaire Output

Beam Type	VW
Beam	360º
Luminous Flux	11995 lm
CRI CCT	930

Light distribution

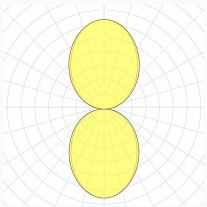

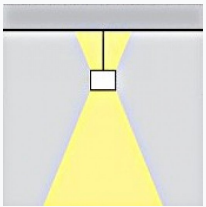

Safety characteristics

IK	04
IP	40
Protection Class	Class I

Temperature Operating Conditions

Lifetime	>80.000h L80B10@35°C
Operating Ambient Temperature	-10...+45°C
Operating Humidity Level	5...95%