SEDO BENE 20



Technical drawings

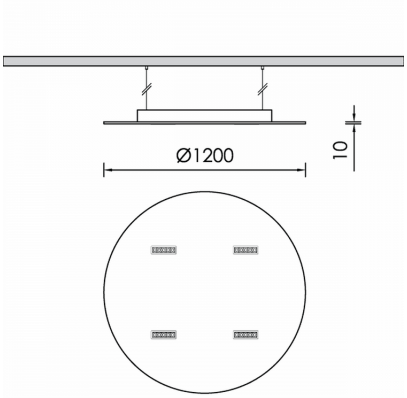

Product Details

CE LM80 LM79 TM21 REACH Source Type Linear LED

General Information

Housing	Acoustic Panel
Product code	PRA0470CL017ON
Product family	BENE
Diffuser	PMMA
Control Gear	Remote Electronic Driver
Options for Dimming Control	On-Off
Height	10 mm
Diameter	1200 mm

Electrical data

Consumption	17,6 W
Performance	82.5 lm/W
Ripple	3
Power Factor	0.96

Luminaire Output

Beam Type	N
Beam	15º
Luminous Flux	1452 lm
CRI CCT	927

Light distribution

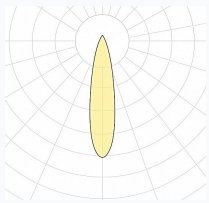

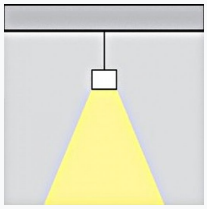

Safety characteristics

IK	04
IP	20

Temperature Operating Conditions

Operating Ambient Temperature	-10...+45°C
Operating Humidity Level	5...95%