SEDO BENE 20



Technical drawings

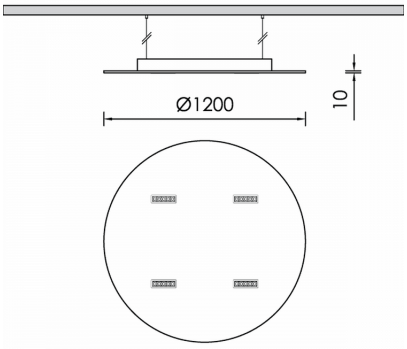

Product Details

CE LM80 LM79 TM21 REACH Source Type Linear LED

General Information

Housing	Acoustic Panel
Product code	PRA0474CL018DAC
Product family	BENE
Diffuser	PMMA
Control Gear	Remote Electronic Driver
Options for Dimming Control	DALI2
Options for Wireless Dimming	Casambi
Height	10 mm
Diameter	1200 mm

Electrical data

Consumption	8,8 W
Performance	88.18 lm/W
Ripple	3
Power Factor	0.96

Luminaire Output

Beam Type	W
Beam	45º
Luminous Flux	776 lm
CRI CCT	927

Light distribution

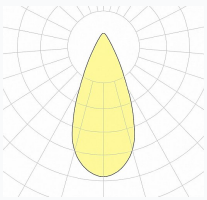

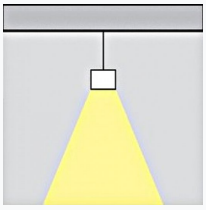

Safety characteristics

IK	04
IP	20

Temperature Operating Conditions

Operating Ambient Temperature	-10...+45°C
Operating Humidity Level	5...95%