# SEDO BENE 20



## Technical drawings

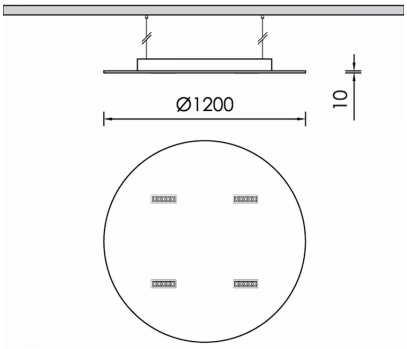


## Product Details

CE LM80 LM79 TM21 REACH Source Type Linear LED

### General Information

| | |
|---|---|
| Housing | Acoustic Panel |
| Product code | PRA0475CL017DAC |
| Product family | BENE |
| Diffuser | PMMA |
| Control Gear | Remote Electronic Driver |
| Options for Dimming Control | DALI2 |
| Options for Wireless Dimming | Casambi |
| Height | 10 mm |
| Diameter | 1200 mm |

### Electrical data

| | |
|---|---|
| Consumption | 12,8 W |
| Performance | 84.06 lm/W |
| Ripple | 3 |
| Power Factor | 0.96 |

### Luminaire Output

| | |
|---|---|
| Beam Type | W |
| Beam | 45º |
| Luminous Flux | 1076 lm |
| CRI CCT | 927 |

### Light distribution

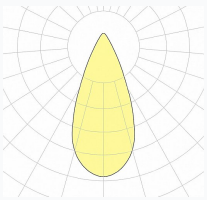

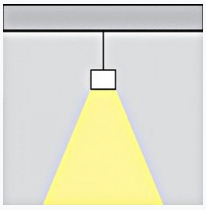

### Safety characteristics

| | |
|---|---|
| IK | 04 |
| IP | 20 |

### Temperature Operating Conditions

| | |
|---|---|
| Operating Ambient Temperature | -10...+45°C |
| Operating Humidity Level | 5...95% |