HEADOFFICE: Showroom 13 Sofokli Venizelou Ave., Likovrisi, P.O. Box 14123, Athens, Greece Tel: (+30) 210 2851 304 I www.bright.gr I info@bright.gr

SILVA 12 P



Technical drawings

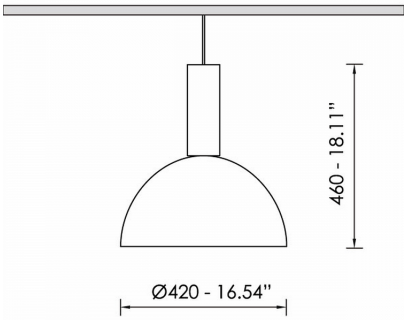

Product Details

CE LM80 LM79 TM21 REACH Source Type COB LED

General Information

Housing	Aluminium
Product code	HB0060CL001DA
Product family	SILVA
Control Gear	Built-in ECG
Options for Dimming Control	DALI2
Height	460 mm
Diameter	420 mm

Electrical data

Consumption	34,2 W
Performance	113.19 lm/W
Ripple	3
Power Factor	0.96
Nominal Voltage	230 V

Luminaire Output

Beam Type	N
Beam	15º
Luminous Flux	3871 lm
CRI CCT	940
Glare Indicator Ugr Longwise Optics	17
Glare Indicator Ugr Parallel Optics	17

Light distribution

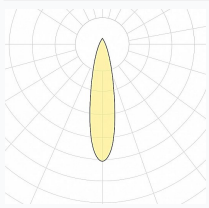

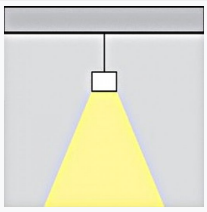

Safety characteristics

IK	04
IP	20
Protection Class	Class I

Temperature Operating Conditions

Lifetime	>60.000h L80B10@35°C
Operating Ambient Temperature	-10...+45°C
Operating Humidity Level	5...95%