FIRMUS B 50 SP



Technical drawings

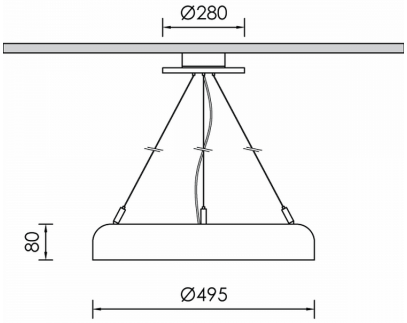

Product Details

CE LM80 LM79 TM21 REACH Source Type Linear LED

General Information

Housing	Metal
Product code	DES0071CL009ON
Product family	FIRMUS
Diffuser	Opal Polycarbonate
Control Gear	Built-in ECG
Options for Dimming Control	On-Off
Height	80 mm

Electrical data

Consumption	16,6 W
Performance	115 lm/W
Ripple	3
Power Factor	0.96
Nominal Voltage	230 V

Luminaire Output

Beam Type	VW
Beam	115º
Luminous Flux	1909 lm
CRI CCT	940

Light distribution

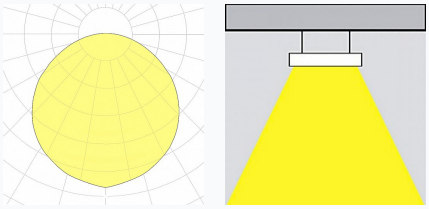

Safety characteristics

IK	03
IP	20
Protection Class	Class I

Temperature Operating Conditions

Lifetime	>80.000h L80B10@35°C
Operating Ambient Temperature	-10...+45°C
Operating Humidity Level	5...95%