FIRMUS 60 DZ



Technical drawings

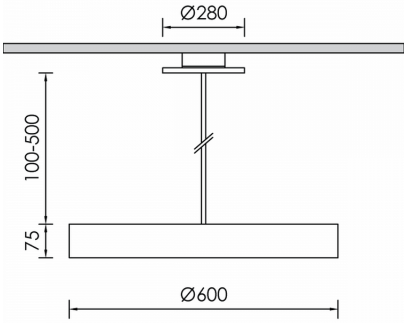

Product Details

CE LM80 LM79 TM21 REACH Source Type Linear LED

General Information

Housing	Metal
Product code	DES0089CL001DA
Product family	FIRMUS
Diffuser	Opal Polycarbonate
Control Gear	Built-in ECG
Options for Dimming Control	DALI2
Height	75 mm

Electrical data

Consumption	23 W
Performance	115 lm/W
Ripple	3
Power Factor	0.96
Nominal Voltage	230 V

Luminaire Output

Beam Type	VW
Beam	115º
Luminous Flux	2645 lm
CRI CCT	940

Light distribution

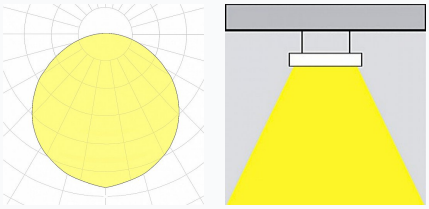

Safety characteristics

IK	03
IP	20
Protection Class	Class I

Temperature Operating Conditions

Lifetime	>80.000h L80B10@35°C
Operating Ambient Temperature	-10...+45°C
Operating Humidity Level	5...95%