VERNO 1 T30



Technical drawings

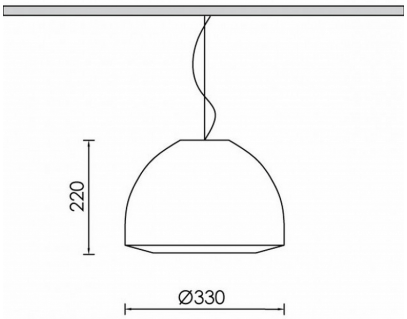

Product Details

CE LM80 LM79 TM21 REACH Source Type E27 LED Lamp

General Information

Housing	Metal
Product code	DES0138CL025
Product family	VERNO
Height	220 mm
Diameter	330 mm

Electrical data

Luminaire Output

Light distribution

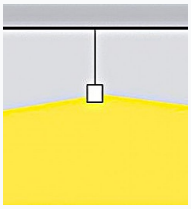

Safety characteristics

IK	03

Temperature Operating Conditions