FUMO SP 1



Technical drawings

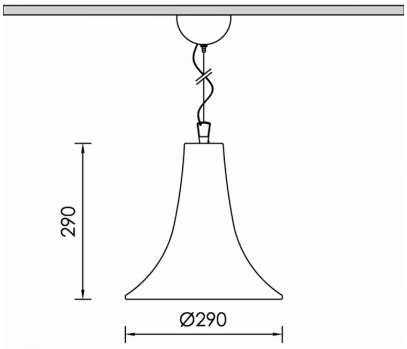

Product Details

CE LM80 LM79 TM21 REACH Source Type E27 LED Lamp

General Information

Housing	Concrete
Product code	DES0144CL107
Product family	FUMO
Height	290 mm
Diameter	290 mm

Electrical data

Luminaire Output

Light distribution

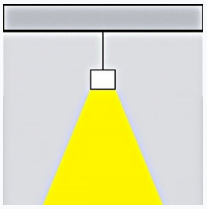

Safety characteristics

IK	02
IP	20

Temperature Operating Conditions