FERUS SP LED



Technical drawings

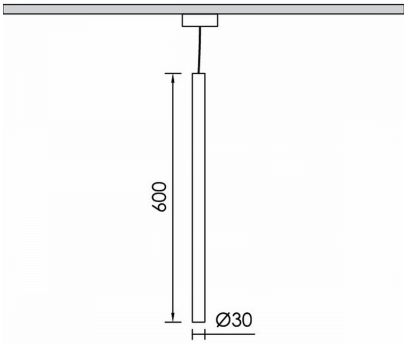

Product Details

CE LM80 LM79 TM21 REACH Source Type H.P. LED

General Information

Housing	Aluminium
Product code	DES0205CL002ON
Product family	FERUS
Control Gear	Built-in ECG
Options for Dimming Control	On-Off
Height	600 mm

Electrical data

Consumption	1,1 W
Performance	108.18 lm/W
Ripple	3
Power Factor	0.96
Nominal Voltage	230 V

Luminaire Output

Beam Type	W
Beam	45º
Luminous Flux	119 lm
CRI CCT	930

Light distribution

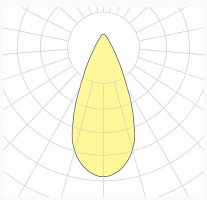

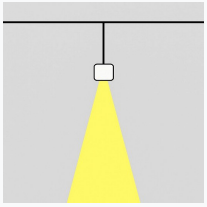

Safety characteristics

IK	05
IP	40
Protection Class	Class I

Temperature Operating Conditions

Lifetime	>60.000h L80B10@35°C
Operating Ambient Temperature	-10...+45°C
Operating Humidity Level	5...95%