FERUS 20 TABLE A



Technical drawings

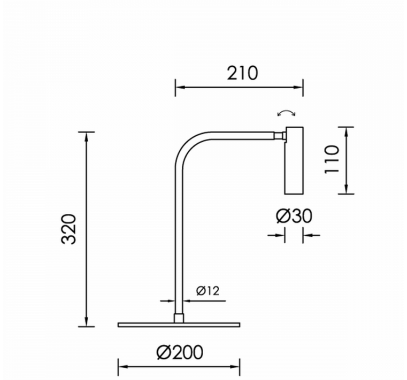

Product Details

CE LM80 LM79 TM21 REACH Source Type H.P. LED

General Information

Housing	Metal
Product code	DET0022CL005DA
Product family	FERUS
Control Gear	Built-in ECG
Options for Dimming Control	DALI2
Height	320 mm

Electrical data

Consumption	1,7 W
Performance	96.47 lm/W
Ripple	3
Power Factor	0.96
Nominal Voltage	230 V

Luminaire Output

Beam Type	W
Beam	45º
Luminous Flux	164 lm
CRI CCT	930

Light distribution

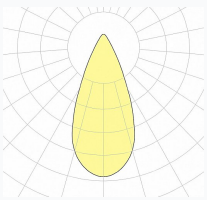

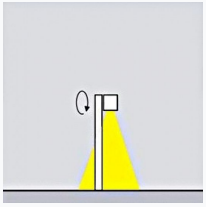

Safety characteristics

IK	04
IP	40
Protection Class	Class I

Temperature Operating Conditions

Lifetime	>50.000h L80B10@35°C
Operating Ambient Temperature	-20...+45ºC
Operating Humidity Level	5...95%