FERUS 30 BS100

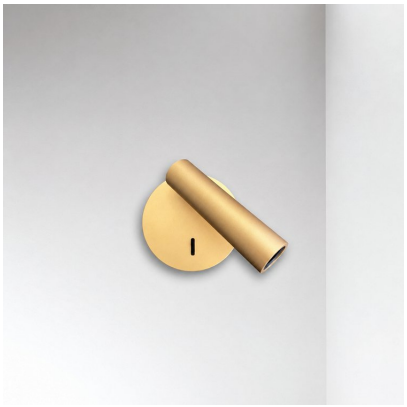

Technical drawings

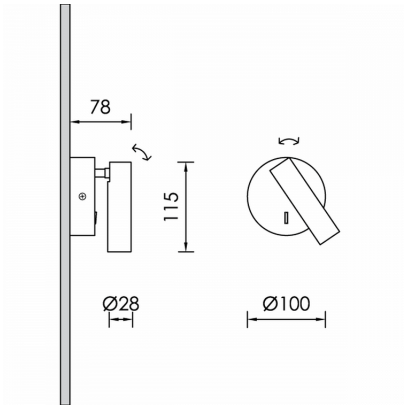

Product Details

CE LM80 LM79 TM21 REACH Source Type H.P. LED

General Information

Housing	Metal
Product code	DER0007CL002DA
Product family	FERUS
Control Gear	Built-in ECG
Options for Dimming Control	DALI2
Height	193 mm

Electrical data

Consumption	1,1 W
Performance	108.18 lm/W
Ripple	3
Power Factor	0.96
Nominal Voltage	230 V

Luminaire Output

Beam Type	N
Beam	8º
Luminous Flux	119 lm
CRI CCT	930

Light distribution

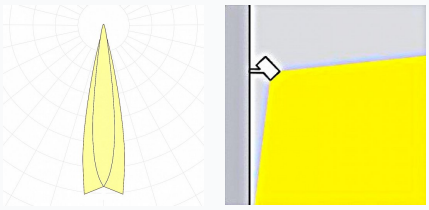

Safety characteristics

IK	05
IP	40
Protection Class	Class I

Temperature Operating Conditions

Lifetime	>50.000h L80B10@35°C
Operating Ambient Temperature	-10...+45ºC
Operating Humidity Level	5...95%