# FERUS 20 H.P.LED



## Technical drawings

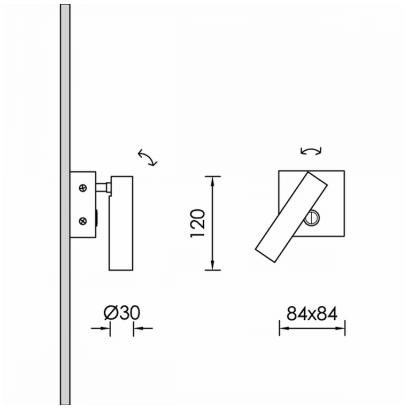


## Product Details

CE LM80 LM79 TM21 REACH Source Type H.P. LED

### General Information

| | |
|---|---|
| Housing | Brass |
| Product code | DER0090CL003DA |
| Product family | FERUS |
| Control Gear | Built-in ECG |
| Options for Dimming Control | DALI2 |

### Electrical data

| | |
|---|---|
| Consumption | 1,7 W |
| Performance | 94.12 lm/W |
| Ripple | 3 |
| Power Factor | 0.96 |
| Nominal Voltage | 230 V |

### Luminaire Output

| | |
|---|---|
| Beam Type | M |
| Beam | 25º |
| Luminous Flux | 160 lm |
| CRI CCT | 927 |

### Light distribution

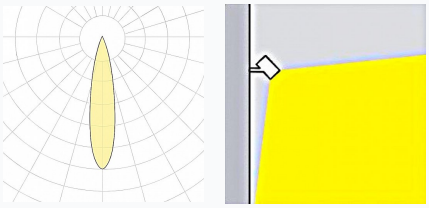

### Safety characteristics

| | |
|---|---|
| IK | 05 |
| IP | 40 |
| Protection Class | Class I |

### Temperature Operating Conditions

| | |
|---|---|
| Lifetime | >50.000h L80B10@35°C |
| Operating Ambient Temperature | -10...+45ºC |
| Operating Humidity Level | 5...95% |