HEADOFFICE: Showroom 13 Sofokli Venizelou Ave., Likovrisi, P.O. Box 14123, Athens, Greece Tel: (+30) 210 2851 304 I www.bright.gr I info@bright.gr

FERUS 20 IN SQ H.P.LED



Technical drawings

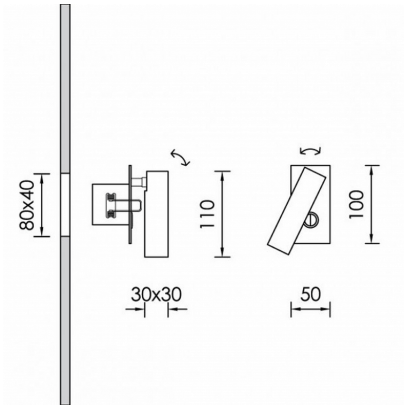

Product Details

CE LM80 LM79 TM21 REACH Source Type H.P. LED

General Information

Housing	Metal
Product code	DER0130CL001DA
Product family	FERUS
Control Gear	Built-in ECG
Options for Dimming Control	DALI2
Width	30 mm
Length	110 mm
Height	30 mm

Electrical data

Consumption	1,7 W
Performance	103.53 lm/W
Ripple	3
Power Factor	0.96
Nominal Voltage	230 V

Luminaire Output

Beam Type	N
Beam	8º
Luminous Flux	176 lm
CRI CCT	940

Light distribution

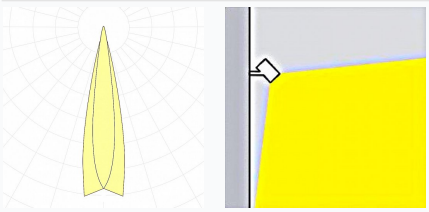

Safety characteristics

IK	05
IP	40
Protection Class	Class I

Temperature Operating Conditions

Lifetime	>50.000h L80B10@35°C
Operating Ambient Temperature	-10...+45ºC
Operating Humidity Level	5...95%