FERUS 20 IN SQ H.P.LED



Technical drawings

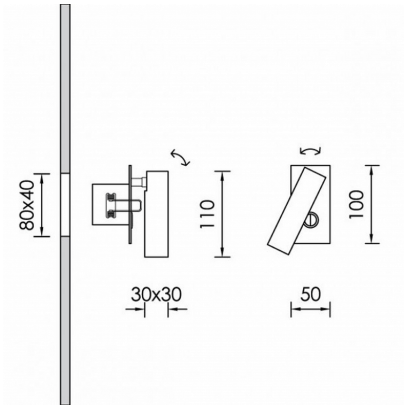

Product Details

CE LM80 LM79 TM21 REACH Source Type H.P. LED

General Information

Housing	Brass
Product code	DER0143CL002DA
Product family	FERUS
Control Gear	Built-in ECG
Options for Dimming Control	DALI2
Width	30 mm
Length	110 mm
Height	30 mm

Electrical data

Consumption	1,1 W
Performance	104.55 lm/W
Ripple	3
Power Factor	0.96
Nominal Voltage	230 V

Luminaire Output

Beam Type	W
Beam	45º
Luminous Flux	115 lm
CRI CCT	927

Light distribution

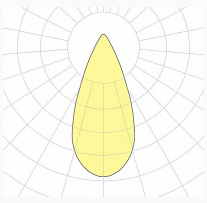

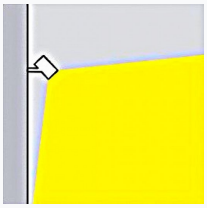

Safety characteristics

IK	05
IP	40
Protection Class	Class I

Temperature Operating Conditions

Lifetime	>50.000h L80B10@35°C
Operating Ambient Temperature	-10...+45ºC
Operating Humidity Level	5...95%