FERUS 20 SQ H.P.LED



Technical drawings

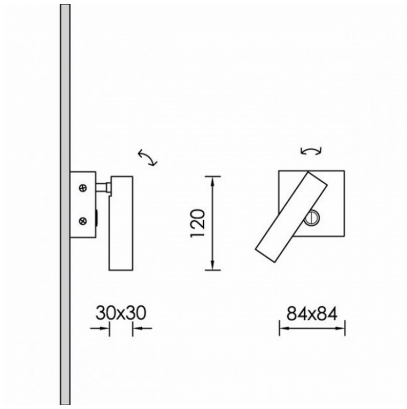

Product Details

CE LM80 LM79 TM21 REACH Source Type H.P. LED

General Information

Housing	Brass
Product code	DER0161CL002ON
Product family	FERUS
Control Gear	Built-in ECG
Options for Dimming Control	On-Off
Width	30 mm
Length	120 mm
Height	30 mm

Electrical data

Consumption	1,1 W
Performance	104.55 lm/W
Ripple	3
Power Factor	0.96
Nominal Voltage	230 V

Luminaire Output

Beam Type	M
Beam	25º
Luminous Flux	115 lm
CRI CCT	927

Light distribution

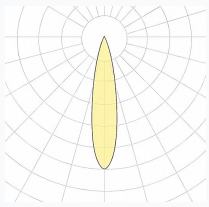

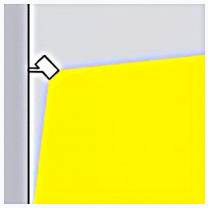

Safety characteristics

IK	05
IP	40
Protection Class	Class I

Temperature Operating Conditions

Lifetime	>50.000h L80B10@35°C
Operating Ambient Temperature	-10...+45ºC
Operating Humidity Level	5...95%