HEADOFFICE: Showroom 13 Sofokli Venizelou Ave., Likovrisi, P.O. Box 14123, Athens, Greece Tel: (+30) 210 2851 304 I www.bright.gr I info@bright.gr

FERUS 20 WALL 3



Technical drawings

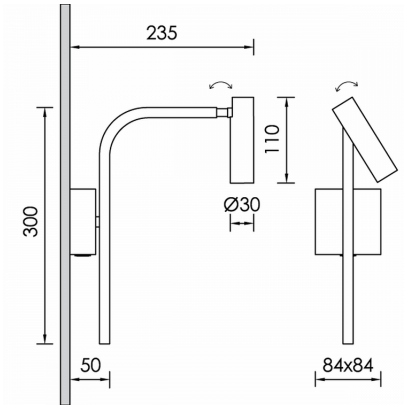

Product Details

CE LM80 LM79 TM21 REACH Source Type H.P. LED

General Information

Housing	Metal
Product code	DER0209CL007DAC
Product family	FERUS
Control Gear	Built-in ECG
Options for Dimming Control	DALI2
Options for Wireless Dimming	Casambi
Width	84 mm
Length	110 mm
Height	235 mm

Electrical data

Consumption	1,1 W
Performance	104.55 lm/W
Ripple	3
Power Factor	0.96
Nominal Voltage	230 V

Luminaire Output

Beam Type	M
Beam	25º
Luminous Flux	115 lm
CRI CCT	927

Light distribution

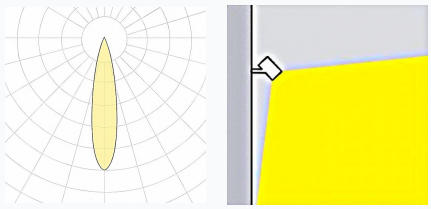

Safety characteristics

IK	05
IP	40
Protection Class	Class I

Temperature Operating Conditions

Lifetime	>50.000h L80B10@35°C
Operating Ambient Temperature	-10...+45ºC
Operating Humidity Level	5...95%