HEADOFFICE: Showroom 13 Sofokli Venizelou Ave., Likovrisi, P.O. Box 14123, Athens, Greece Tel: (+30) 210 2851 304 I www.bright.gr I info@bright.gr

FORTIS Q LED



Technical drawings

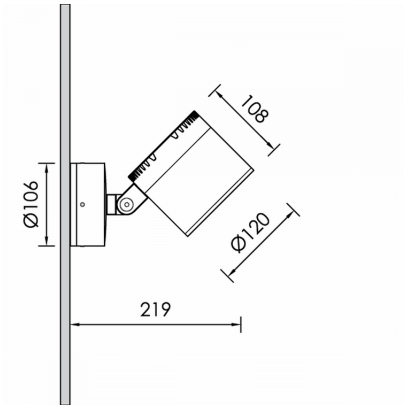

Product Details

CE LM80 LM79 TM21 REACH Source Type COB LED

General Information

Housing	Aluminium
Product code	PJ0039CL002DA
Product family	FORTIS
Diffuser	Safety Glass Clear
Control Gear	Built-in ECG
Options for Dimming Control	DALI2
Height	219 mm

Electrical data

Consumption	16,1 W
Performance	87.89 lm/W
Ripple	3
Power Factor	0.96
Nominal Voltage	230 V

Luminaire Output

Beam Type	XW
Beam	60º
Luminous Flux	1415 lm
CRI CCT	930

Light distribution

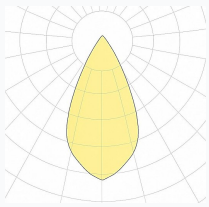

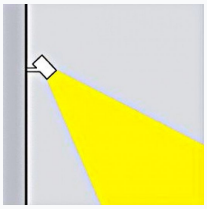

Safety characteristics

IK	06
IP	65
Protection Class	Class I

Temperature Operating Conditions

Lifetime	>60.000h L80B10@35°C
Operating Ambient Temperature	-20...+45ºC
Operating Humidity Level	5...95%